DIGI-CABIN

Design
Vincent Tordjman

DIGI-CABIN

La Villette Numérique

Digi-Cabin is an interactive video game module prototype, an interactive video game imprisons or ejects players or their avatars in this stacking cabin modules conceived in collaboration with Russian artist Olga Kisseleva.

Visitors are invited to play and their acting on the virtual world influences their physical playing space.
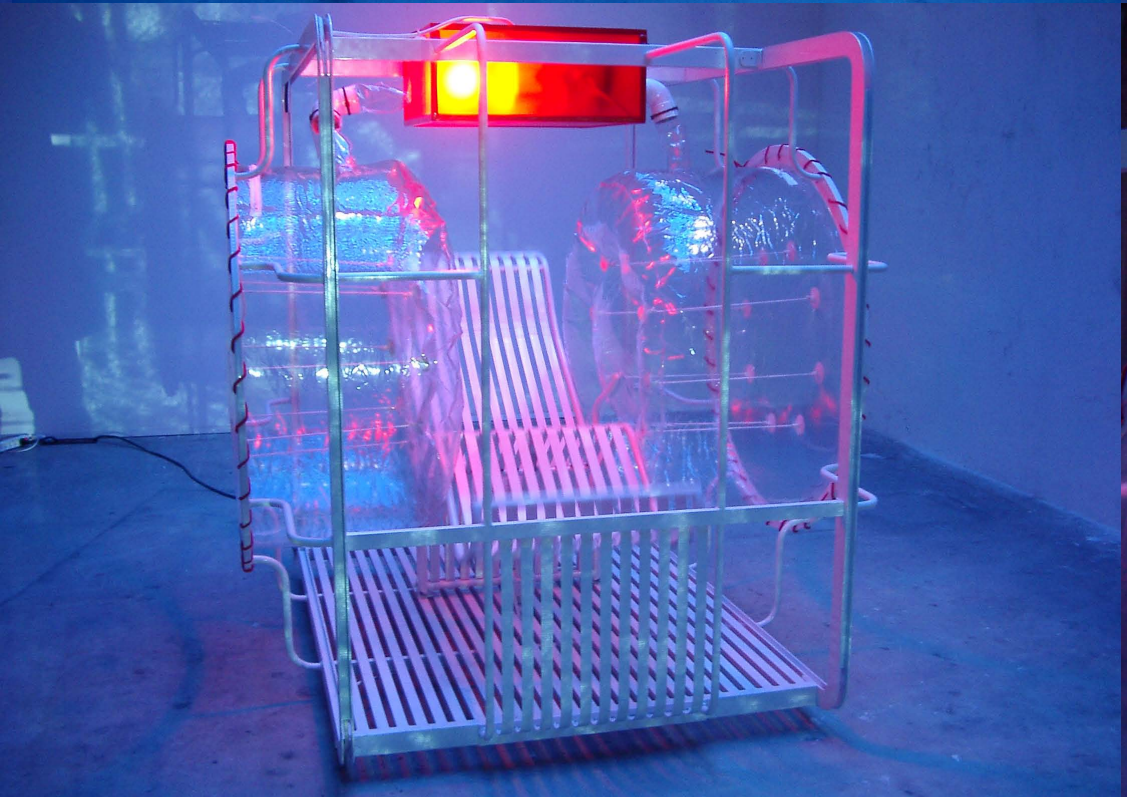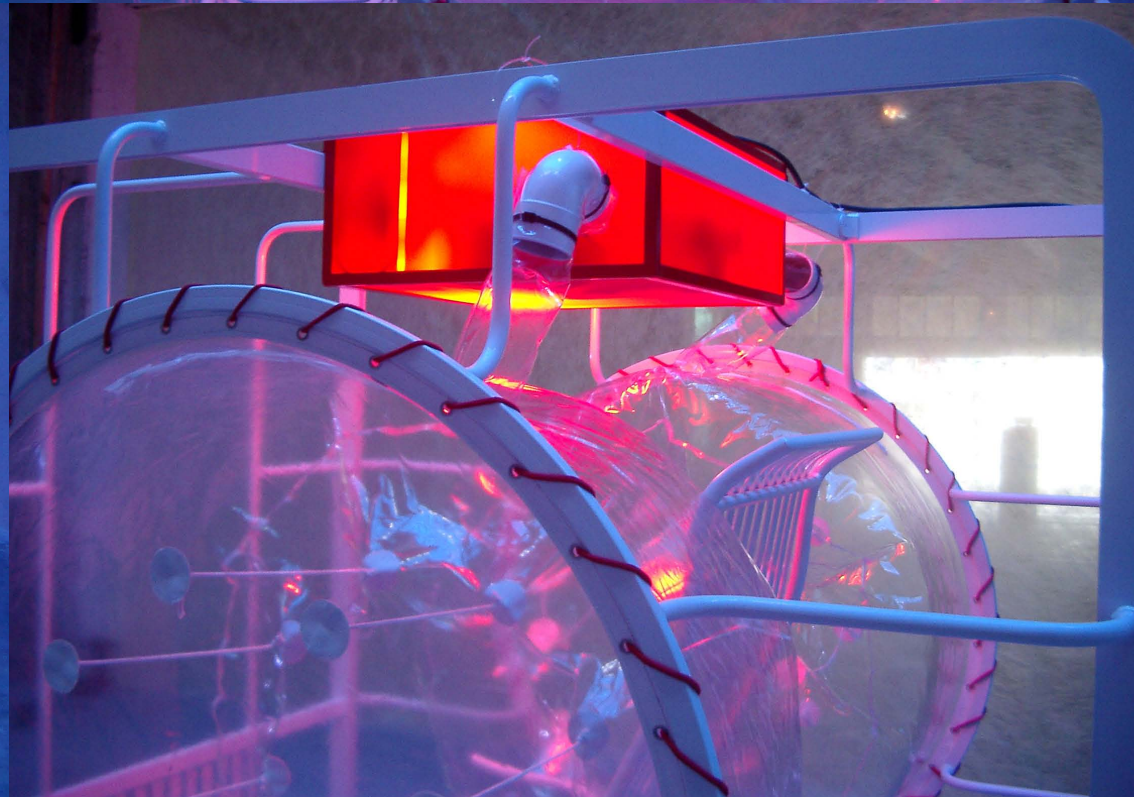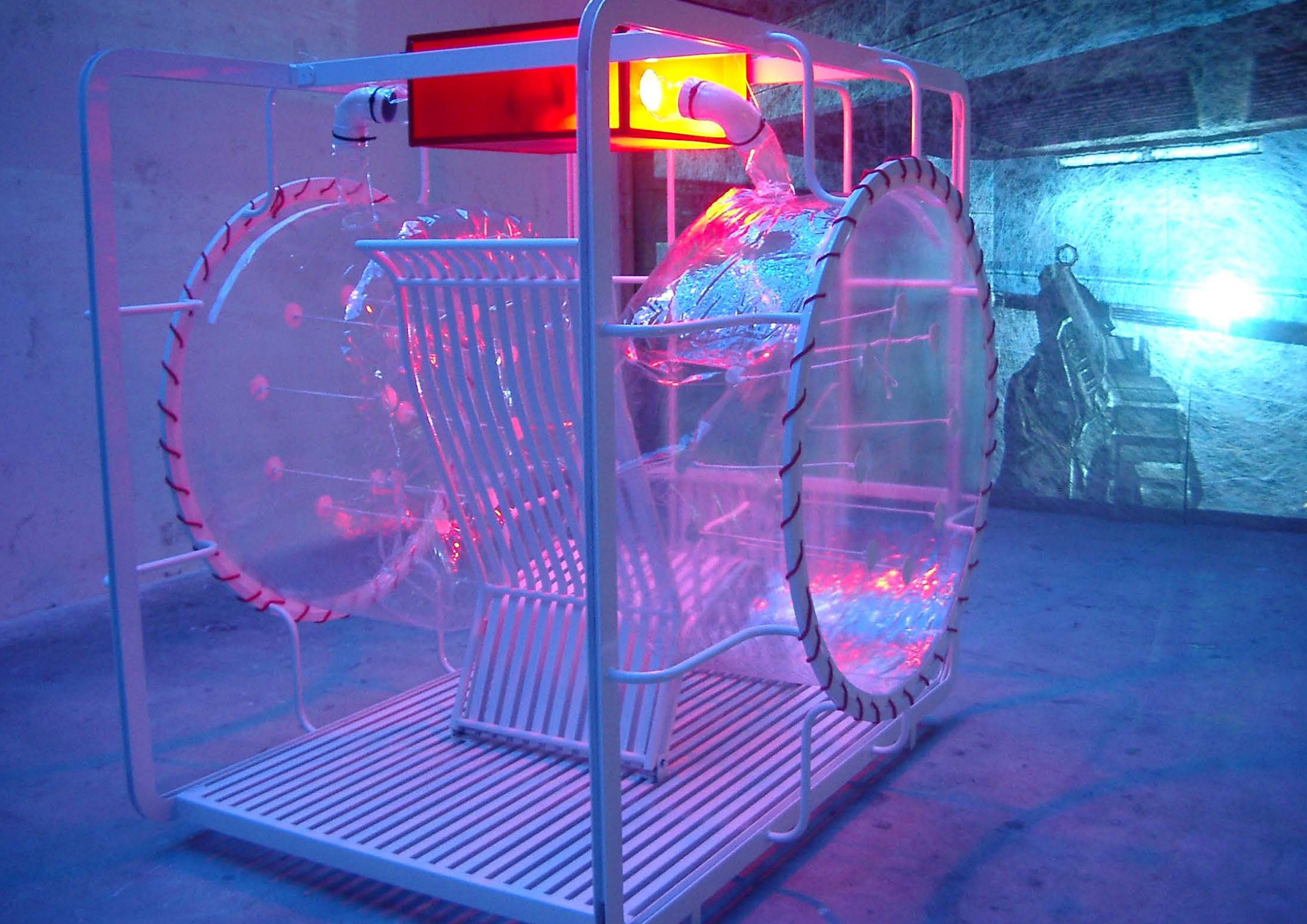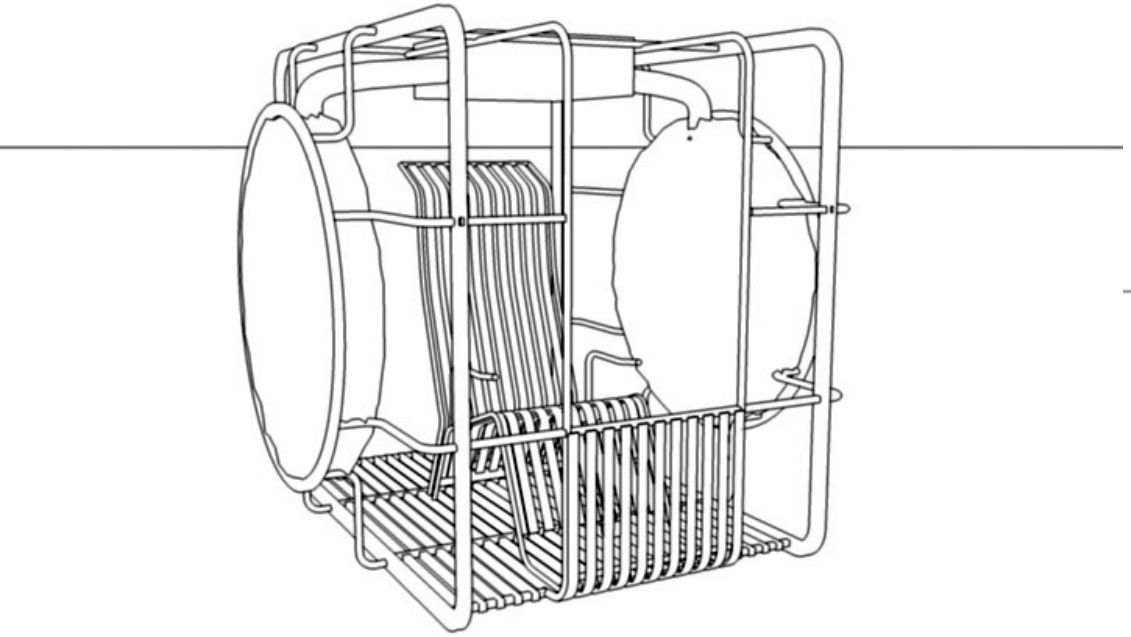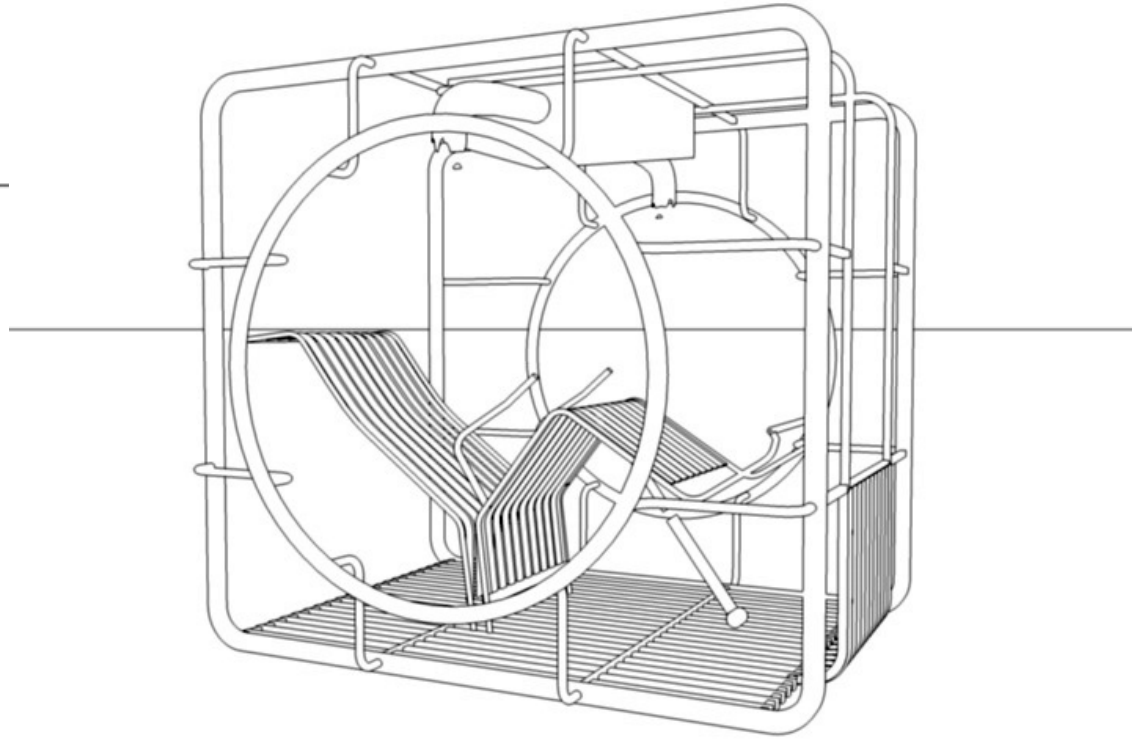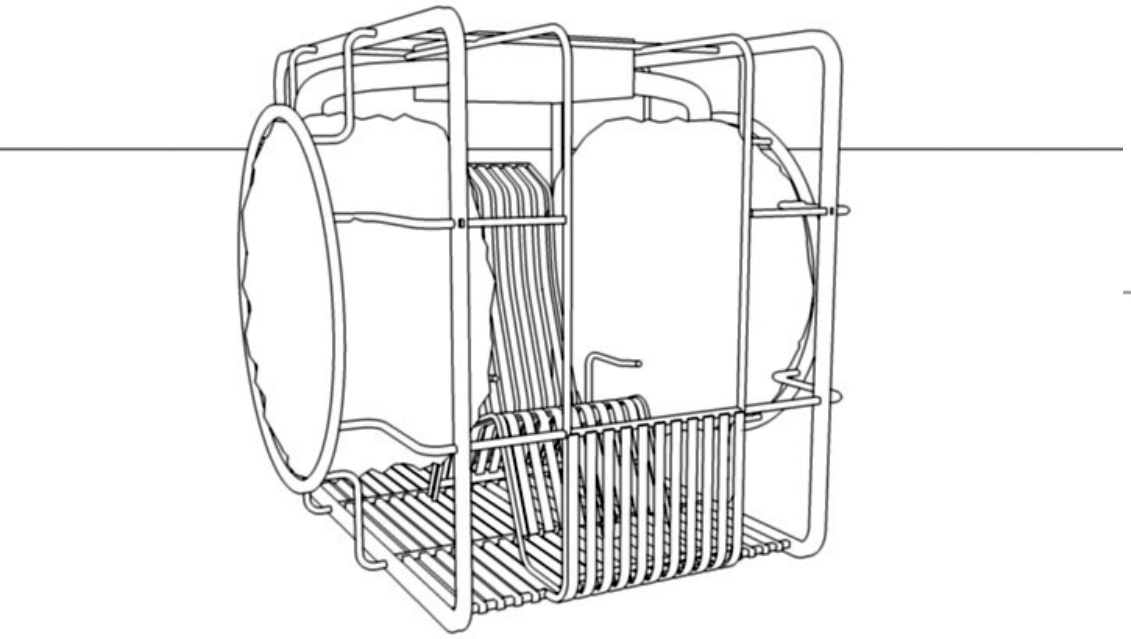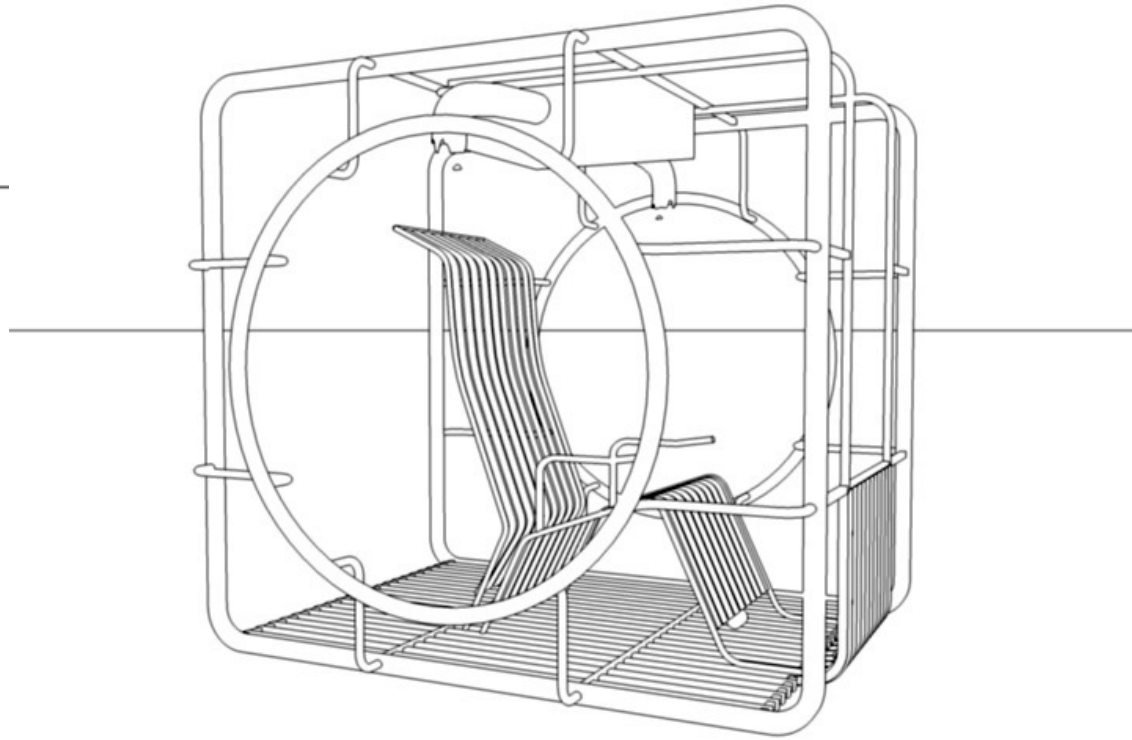
Prototype shown in la Passerelle, Brest – and in Power, la Villette Numérique, in September 2004.